Did you know...

Your water can become contaminated if connections to your plumbing system are not properly protected!

The purpose of the local Cross-Connection Control Program, as required by State Plumbing Code and Regulations, is to ensure that everyone in the community has safe, clean drinking water.

Public Health & Safety....

To avoid contamination, backflow preventers are required by state plumbing codes wherever there is an actual or potential hazard for a cross-connection. The Wisconsin Department of Natural Resources requires all public water suppliers to maintain an on-going Cross-Connection Control Program involving public education, onsite inspections, and possible corrective actions by building owners if required.

More Information

WI Department of Safety and Professional Services (formerly DOC)
www.dsps.wi.gov

WI Department of Natural Resources
www.dnr.wi.gov

Environmental Protection Agency (EPA)
www.epa.gov

Cross Connection Control / Backflow Prevention
www.nycrocesignsinc.com/wiccc.html

Insert Logo, Custom Message

or

Address & Contact Information Here

Drinking Water Information

Insert Return Address Information Here Or DELETE

Residential Water User Cross-Connection Hazards

Bathrooms & Kitchens

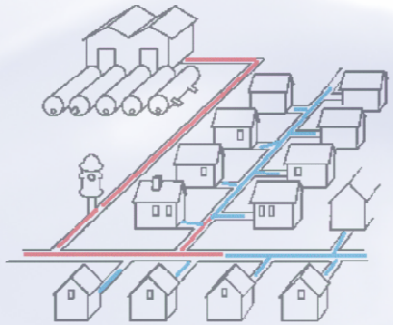

We're All Connected.....

Maintaining the integrity of your public drinking water system.

What is a Cross-Connection?

A cross-connection is an actual or potential connection between the safe drinking water (potable) supply and a source of contamination or pollution. State plumbing codes require approved backflow prevention methods to be installed at every point of potable water connection and use. Cross-Connections must be properly protected or eliminated.

How does contamination occur?

When you turn on your faucet, you expect the water to be as safe as when it left the treatment plant. However, certain hydraulic conditions left unprotected within your plumbing system may allow hazardous substances to contaminate your own drinking water or even the public water supply.

Water normally flows in one direction. However, under certain conditions, water can actually flow backwards; this is known as Backflow. There are two situations that can cause water to flow backward: back siphonage and backpressure.

Backsiphonage

May occur due to a loss of pressure in the municipal water system during a fire fighting emergency, a water main break or system repair. This creates a siphon in your plumbing system which can draw water out of a sink or bucket and back into your water or the public water system.

Backpressure

May be created when a source of pressure (such as a boiler) creates a pressure greater than the pressure supplied from the public water system. This may cause contaminated water to be pushed into your plumbing system through an unprotected cross-connection.

In the Bathroom - Hand Held Shower Fixture

The hand held shower fixture is compliant if:

- When shower head is hanging freely, it is at least 1" above top of the flood level rim of the receptor (tub)
- Complies with **ASSE#1014**
- Has the **ASME code 112.18.1** stamped on the handle

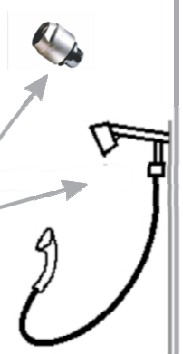

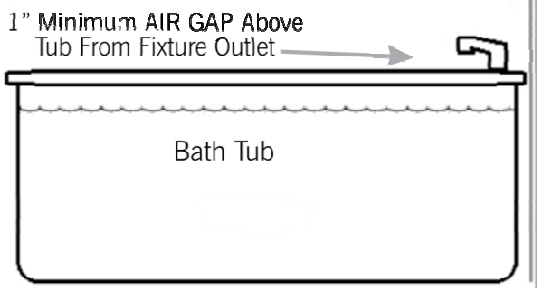

In the Bathroom - Toilet Tanks

There are many unapproved toilet tank fill valve products sold at common retailers which do not meet the state plumbing code requirements for backflow prevention.

- Look for the **ASSE #1002** Standard symbol on the device and packaging
- Replace any unapproved devices with an **ASSE #1002** approved anti siphon ball-cock assembly. Average cost is typically $12 to $22 at home improvement stores
- Verify overflow tube is one inch below critical level (CL) marking on the device

ASSE #1002 Approved Ball Cock Assembly

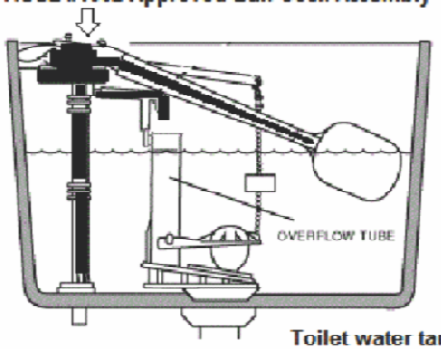

Toilet water tank

Insights to protect your drinking water

Do...

- Keep the ends of hoses clear of all possible contaminants.
- Make sure dishwashers are installed with a proper "air gap" device.
- Verify and install a simple hose bibb vacuum breaker on all threaded faucets around your home.
- Make sure water treatment devices such as water softeners have the proper "air gap", which is a minimum of one inch above any drain.

Hose bibb Vacuum Breaker

Don't...

- Submerge hoses in buckets, pools, tubs, sinks or ponds.
- Use spray attachments without a backflow prevention device.
- Connect waste pipes from water softeners or other treatment systems directly to the sewer or submerged drain pipe. Always be sure there is a one inch "air gap" separation.

Air Gap

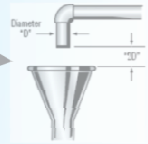

In the Kitchen

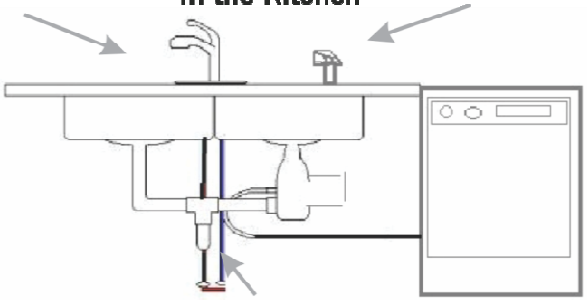

Hoses and water treatment devices may create a potential backflow hazard if not properly isolated with backflow prevention methods.